Package Contents

1 × Luminaire
3 × Pictograms (Right, Left, Down)
1 × User Manual
1 × Bag with mounting accessories

General

This emergency luminaire is designed for installation in indoor spaces with ambient temperatures up to 50°C. It must remain permanently connected to the mains power supply to ensure proper operation. In the event of a mains power failure, the luminaire automatically switches to emergency mode, activating the LEDs to provide reliable safety lighting. Once the mains power is restored, the luminaire returns to normal operation without the need for user intervention.

Indicator LED

- When the green indicator is on, the battery is fully charged.
- When the green indicator is blinking, the battery is charging.

Manual Operational Test

To perform a manual operational test, first remove the diffuser by following Step 1 of the installation procedure. Then, using a small screwdriver, press the test button. By pressing and holding the test button, the emergency circuit of the luminaire is activated. The lighting LEDs should remain on for as long as the button is pressed. If this does not occur, please contact qualified technical support.

Periodic Autonomy Test

It is recommended to carry out a full autonomy test of the luminaire every six months by disconnecting the mains power supply. Record the duration for which the luminaire remains illuminated. If this period is shorter than the specified minimum rated autonomy, the battery must be replaced. If the autonomy time is significantly reduced, contact a qualified technician. Replacement of the battery or lighting LEDs must always be performed using components of the same type, provided by the manufacturer or by an authorized technician.

Lens Removal

If the luminaire is not used as an exit sign and increased light output is required, the lens covering the LED may be removed. To do this, first complete Steps 1 and 2 of the installation procedure. Then use a flat-bladed screwdriver to carefully detach the lens, ensuring that the LED is not damaged. This operation must be performed only by authorized personnel.

ATTENTION!!!

1. Operations for installation, maintenance, or testing must be done by authorized personnel only.
2. Always use round mains cables with a diameter of 5-10mm (H05RN-F type 2x1mm² or any other type at least equal to its mechanical and electrical properties). ATTENTION!! The cable must not be deformed in any way (This requirement is important to ensure the IP rating).
3. The device must be connected to the mains power supply through a circuit breaker that is appropriate for the total line's power load.
4. In case of battery replacement, it must be replaced with the same type, by the manufacturer or a competent person.
5. If the device is inactive for a period greater than 2 months, disconnect the battery by pulling out the battery's connector.
6. If the luminaire no longer meets the rated duration of operation after the corresponding recharge period, the battery must be replaced.

Dimensional drawing

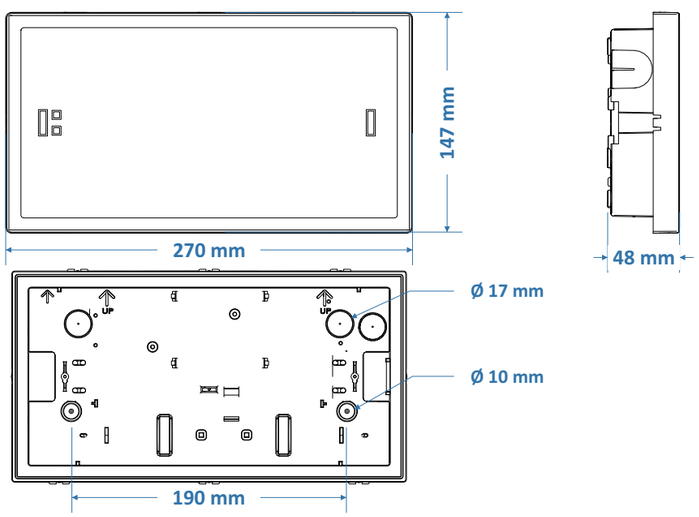

Installation Instructions

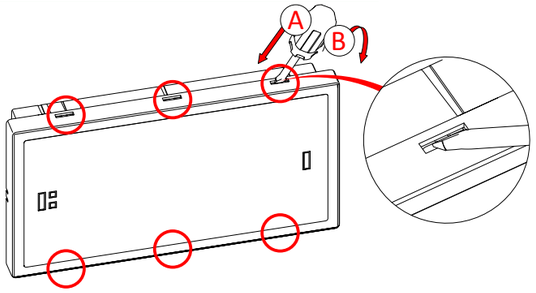

Insert a flat-bladed screwdriver into the six designated points and twist it to remove the luminaire diffuser.

1

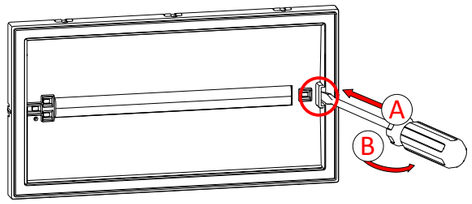

Insert a flat-bladed screwdriver into the designated point and twist it to remove the luminaire reflector.

2

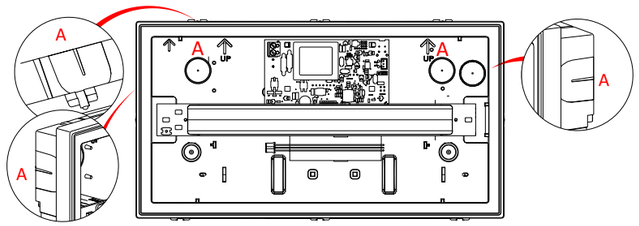

Drill one of the five available holes using a 16–18 mm drill bit and install the included rubber gasket. Use a flat-bladed screwdriver to open a hole in the rubber grommet and pass the power cable through it.

3

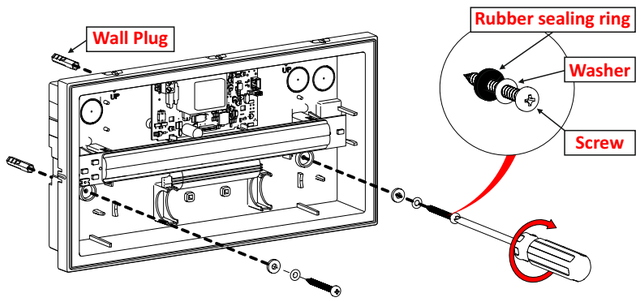

Mount the luminaire to the wall or the ceiling using the supplied mounting accessories, ensuring the correct orientation. To maintain the IP rating, use the rubber sealing ring and the washer included in the package.

4

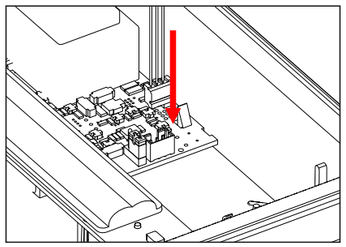

Ensure the luminaire is disconnected from the mains supply before connecting the battery. Connect the battery cable to the appropriate connector on the PCB.

5

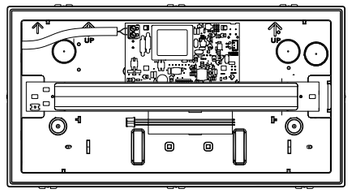

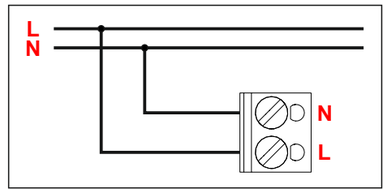

Ensure that the power supply is disconnected before wiring.
Connect the cable to the terminal block: L for the live wire and N for the neutral wire.
Use the included adhesive tether loop and tie wrap to anchor the power cable securely.

6

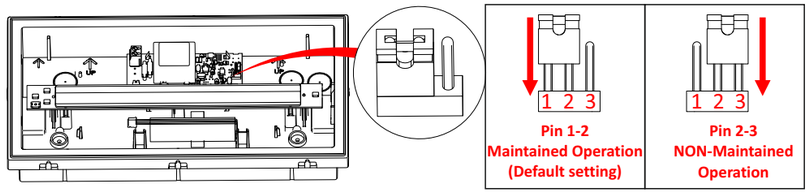

The user can set the luminaire to operate in either maintained or non-maintained mode by adjusting the jumper located at position CN1.

- For maintained operation, place the jumper on pins 1 and 2.
- For non-maintained operation, place the jumper on pins 2 and 3.

This adjustment must only be carried out when the luminaire is disconnected from both the AC supply and the battery. The default setting is maintained operation.

7

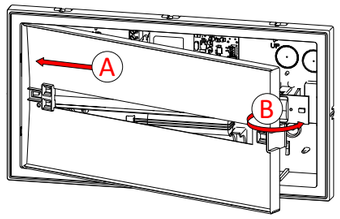

Place the reflector back in position, as removed in Step 2.

8

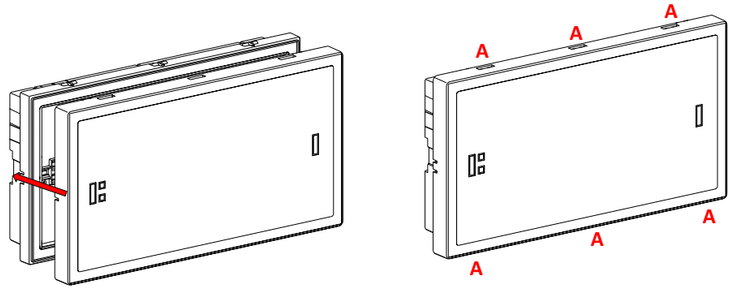

Place the diffuser back in position as removed in Step 1.
Ensure that the six plastic latches **(A)** are fully secured (an audible "click" will confirm this). This step is essential to maintain the IP rating. Finally, switch on the luminaire.

9

Pictogram Installation

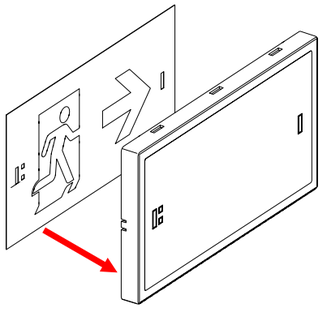

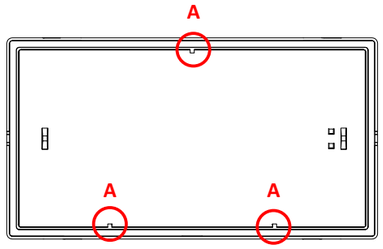

The luminaire can also be used as an exit sign.

1. Follow Step 1 of the installation instructions to remove the diffuser.

2. Attach the appropriate pictogram to the luminaire. Ensure that the pictogram is placed between the three plastic holders "A" and the diffuser.

3. Follow Step 10 of the installation instructions to re-install the diffuser onto the luminaire.

Note! If the luminaire is used as an exit sign, the installer must mark the letter "**G**" on the technical characteristics label or imprint.

X 1 A 60

Mounting Methods

For the recommended installation methods, with or without the corresponding accessories, please scan the QR Code.

NOTE!! After completing the installation, the luminaire must remain connected to the mains power supply for at least 24 hours to fully charge the battery. The rated autonomy duration can only be achieved after this initial charging period.

Battery replacement

The battery replacement must be performed by qualified personnel and only after disconnecting the luminaire from the mains power supply.

1. Follow Step 1 and 2 of the installation instructions to disassemble the luminaire.
2. Disconnect the battery connector from the main PCB (see Step 5 of the installation procedure).
3. Connect the new battery, ensuring it has the same technical specifications as the original.
4. Reinstall all components (see Step 8 and 9 of the installation procedure).

NOTE: LED= Light Emitting Diode

LABELING EXPLANATION:

X: Self contained
1: Maintained/Non maintained operation (*)
A: Including test device **G:** Internally illuminated safety sign
60: 1 hour duration **180:** 3 hours duration

(*) Maintained operation: The luminaire lights its illumination source, when it is powered by the mains power supply or not.
Non Maintained operation: The luminaire lights its illumination source, only in power supply's failure.

ATTENTION!!!

The light source contained in this luminaire shall only be replaced by the manufacturer, or his agent, or a similar qualified person.

NOTE!! The light source is non-user replaceable.

CAUTION! Do not look directly at the light source with your eyes.

Waste Electrical and Electronic Equipment

This symbol indicates that this product must not be disposed of with household waste. Instead, it should be taken to an appropriate collection point for the recycling of electrical and electronic equipment, in accordance with local laws and regulations. Proper disposal helps protect the environment and human health from potential hazards. The batteries of the product must also be collected separately and taken to designated battery recycling points. Do not incinerate them.

Disassembly Information

For the complete disassembly procedure of this product, please scan the QR code.

Technical Characteristics

MODELS	OLY-500/LF/WP	OLY-501/LF/WP
OPERATION VOLTAGE	220-240V AC, 50-60Hz	
MAXIMUM POWER CONSUMPTION	3.3W / 3.5VA	
SUPPLY CURRENT	15mA	
OUTPUT VOLTAGE (U-OUT)	3.65V	
Prated	2W	
Irated	725mA	
MAX OPEN CIRCUIT VOLTAGE	3.65V	
WIRE CROSS SECTION	0.5 - 2.5mm^2	
MINIMUM POWER FACTOR	0.91	
BATTERY (LiFePO$_4$)	3.2V / 1.6 Ah	
INSULATION BETWEEN SUPPLY & CONTROL TERMINALS	Basic Insulation	
INSULATION BETWEEN SUPPLY & BATTERY CIRCUIT	Basic Insulation	
BATTERY PROTECTION	Deep discharge and overcharge protection The control gear will recharge the battery normally after the test of 22.3	
MIN. MAX. DISCHARGE VOLTAGE	3 - 3.64v	
MIN. MAX. DISCHARGE CURRENT	550 - 725mA	
MIN. MAX. CHARGE CURRENT	0 - 100mA	
MAX. CHARGER VOLTAGE	3.64V	
INDICATIONS / CONTROL	CHARGE / TEST BUTTON	
CHARGING TIME	24 hours	
MINIMUM DURATION	1 hour	3 hours
LIGHT SOURCE	LED (CCT: 5000K), Projected LED Lifetime: 100,000 hours (L70)	
LIGHT SOURCE LUMINOUS FLUX (MAINS)	45 lm	
LIGHT SOURCE LUMINOUS FLUX (EMERGENCY)	330 lm	200 lm
DEGREES OF COVER PROTECTION	IP65	
IMPACT PROTECTION RATING	IK09	
PRODUCED IN ACCORDANCE WITH	EN 60598-1, EN 60598-2-22, EN 55015, EN 61547, EN 61000-3-2, EN 61000-3-3	
VIEWING DISTANCE (As exit sign)	25m	
OPERATION TEMPERATURE RANGE	5 to 50 °C	
RELATIVE HUMIDITY	Up to 95%	
CONSTRUCTION MATERIAL	ABS/PC	
CONSTRUCTION COLOR	White (RAL9010)	
DIMENSIONS (L x W x H)	270 x 147 x 48 mm	
MOUNTING METHODS	Wall, Ceiling, Recessed (With Accessory)	
WEIGHT	620 g	
GUARANTEE	3 years (10 years for the battery)	

LED Characteristics

MANUFACTURER	Olympia Electronics S.A.
MODEL NUMBER	2606258
VOLTAGE RANGE	2.9- 3.6V DC
CONNECTIONS	Cable connection between main and LED PCB
TEMPERATURE	Max. 45 °C across the board

Accessories (Upon Request)

922110005 SP-1100/RLDUBL Double sided marking panel with all indicators
927301800 A-3018 Suspended ceiling mounting springs

Terms of Sales - Technical Support

Help Center

72nd km. O.N.R. Thessaloniki-Katerini
P.C. 60300 P.O. Box 06 Eginio Pierias Greece
www.olympia-electronics.com
info@olympia-electronics.com

European manufacturers

WATERPROOF MAINTAINED/NON-MAINTAINED EMERGENCY LUMINAIRES

M | NM | LiFePO$_4$ | 60 min 180 min | 330 lm 200 lm | 3.3W 3.5VA | 5 to 50°C | IP65 | IK09 | 25m

Thank you for your trust in our products
Olympia Electronics - European manufacturer